Cut out in the right size:
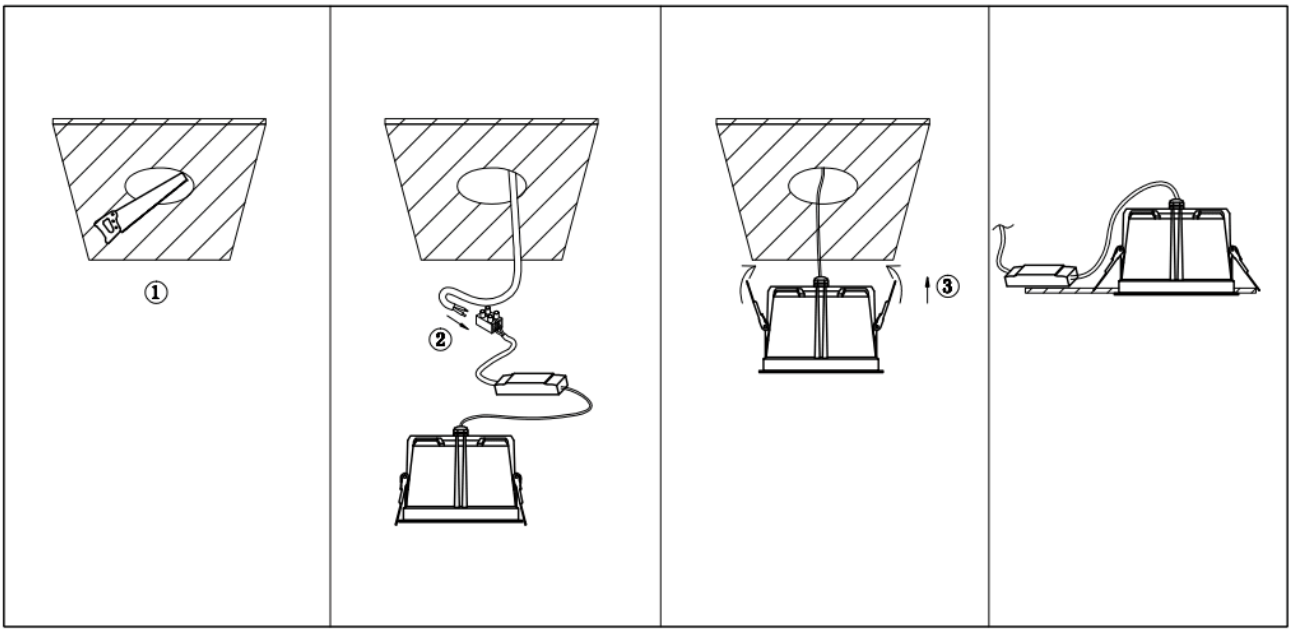
86.D061/D062/D063.1***.** 75mm
86.D061/D062/D063.2***.** 95mm
86.D061/D062/D063.3***.** 130mm